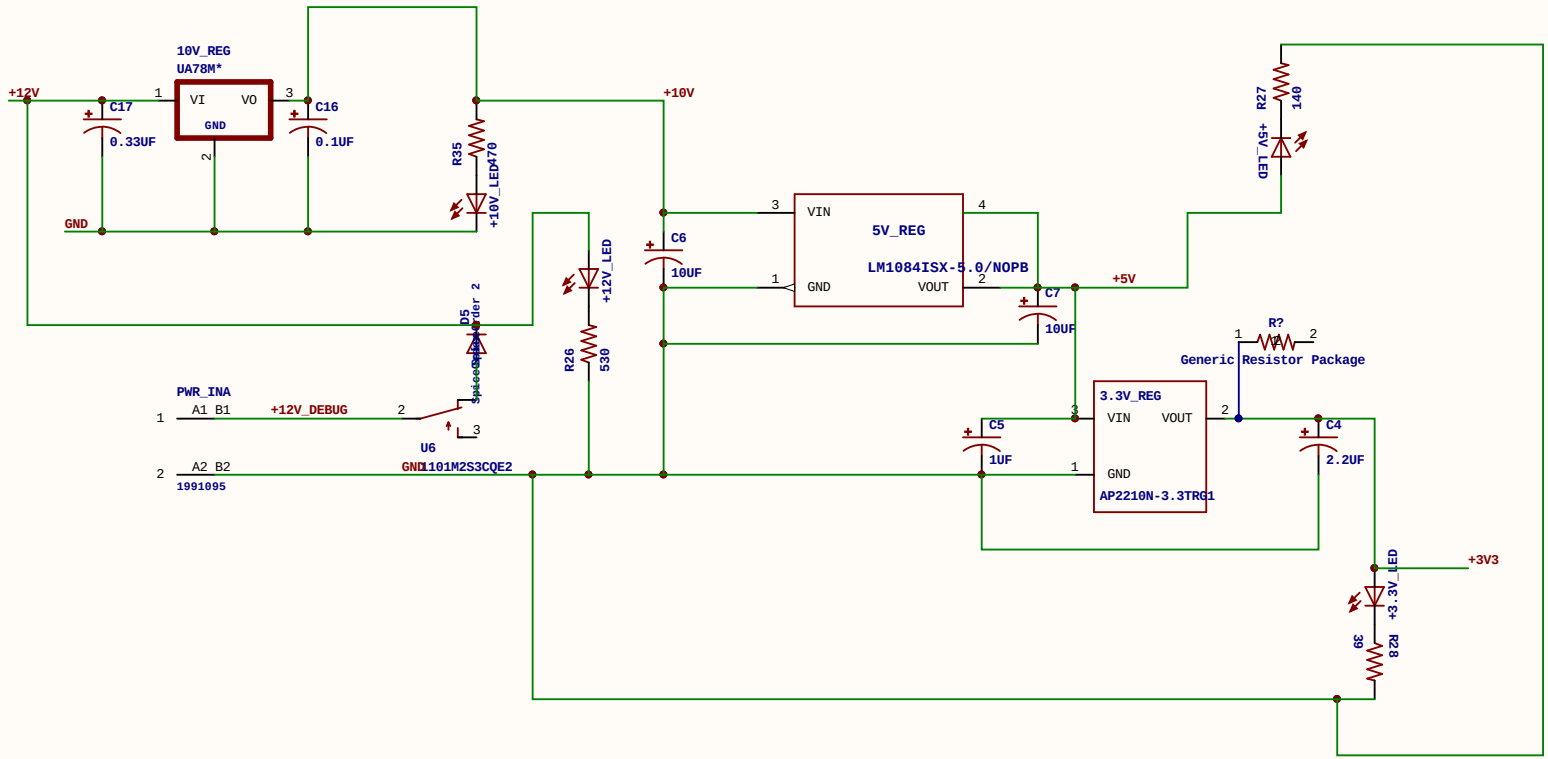

main

9/25/2019 7:26:01 PM

Sheet:

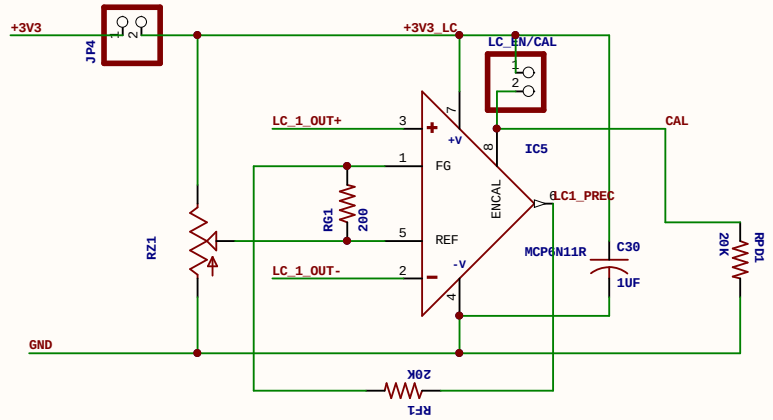

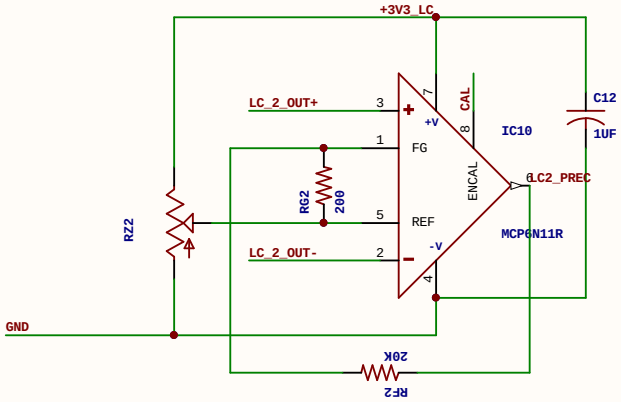

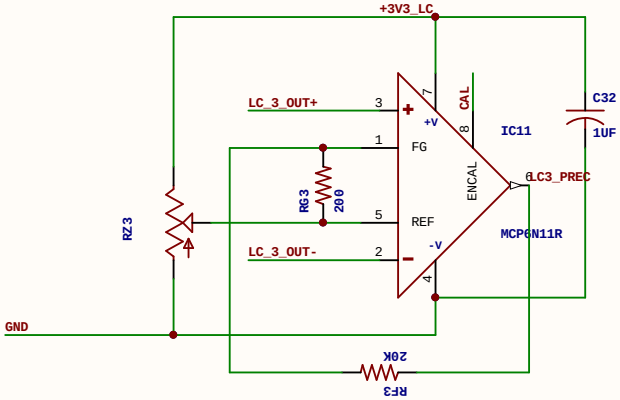

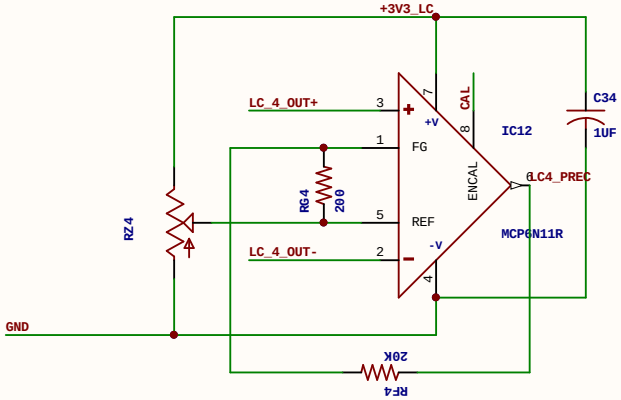

main	
9/25/2019 7:26:04 PM	
Sheet:	

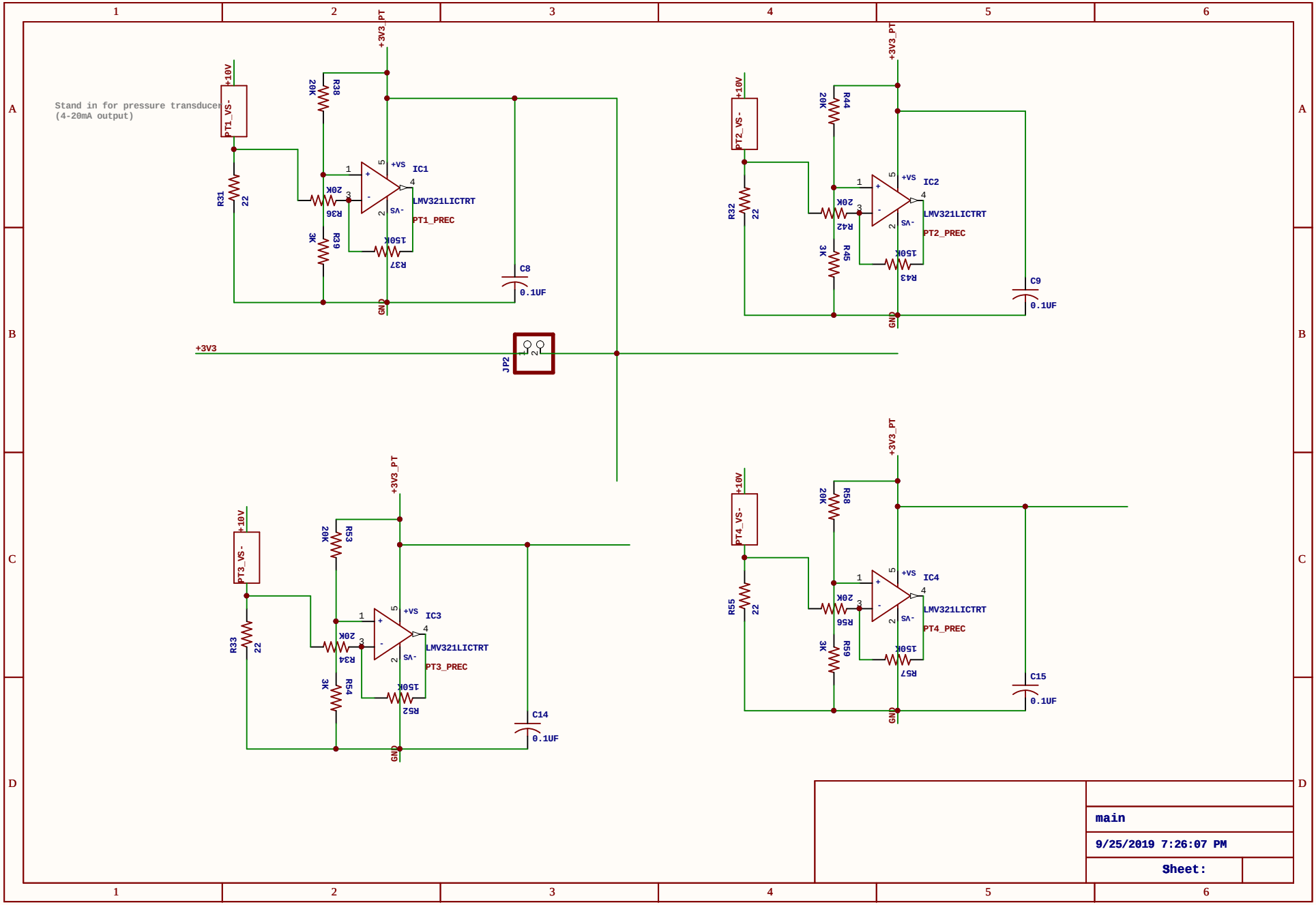
Stand in for pressure transducer
(4-20mA output)
+10V
PT1_VS-
R31
22
R38
20K
R36
20K
R39
3K
R37
150K
+3V3_PT
IC1
LMV321LICTRT
PT1_PREC
+VS
-VS
GND
C8
0.1UF
+3V3
JP2
PT2_VS-
R32
R44
R42
R45
R43
IC2
PT2_PREC
C9
PT3_VS-
R33
R53
R34
R54
R52
IC3
PT3_PREC
C14
PT4_VS-
R55
R58
R56
R59
R57
IC4
PT4_PREC
C15
main
9/25/2019 7:26:07 PM
Sheet:

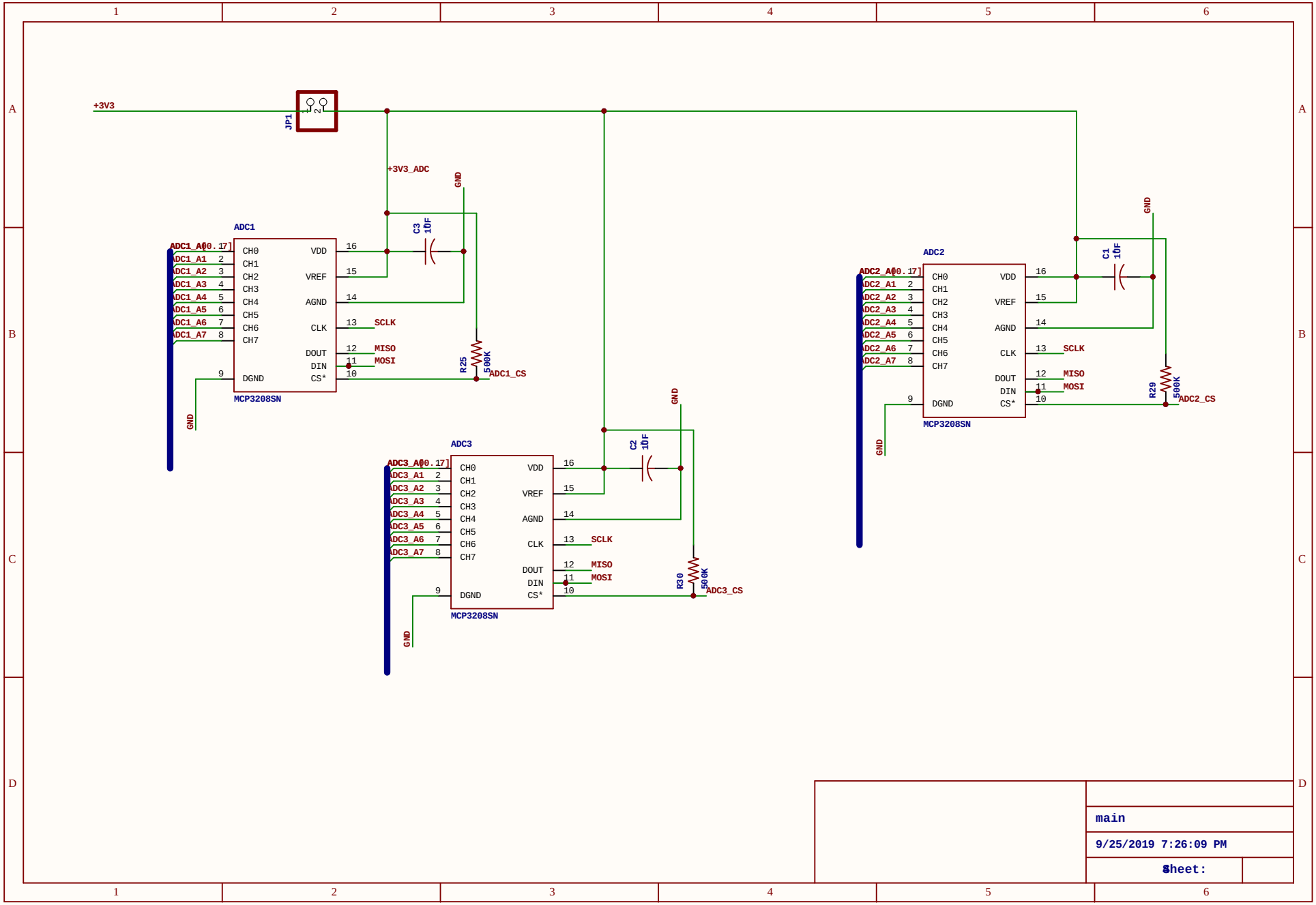

main

9/25/2019 7:26:09 PM

Sheet:

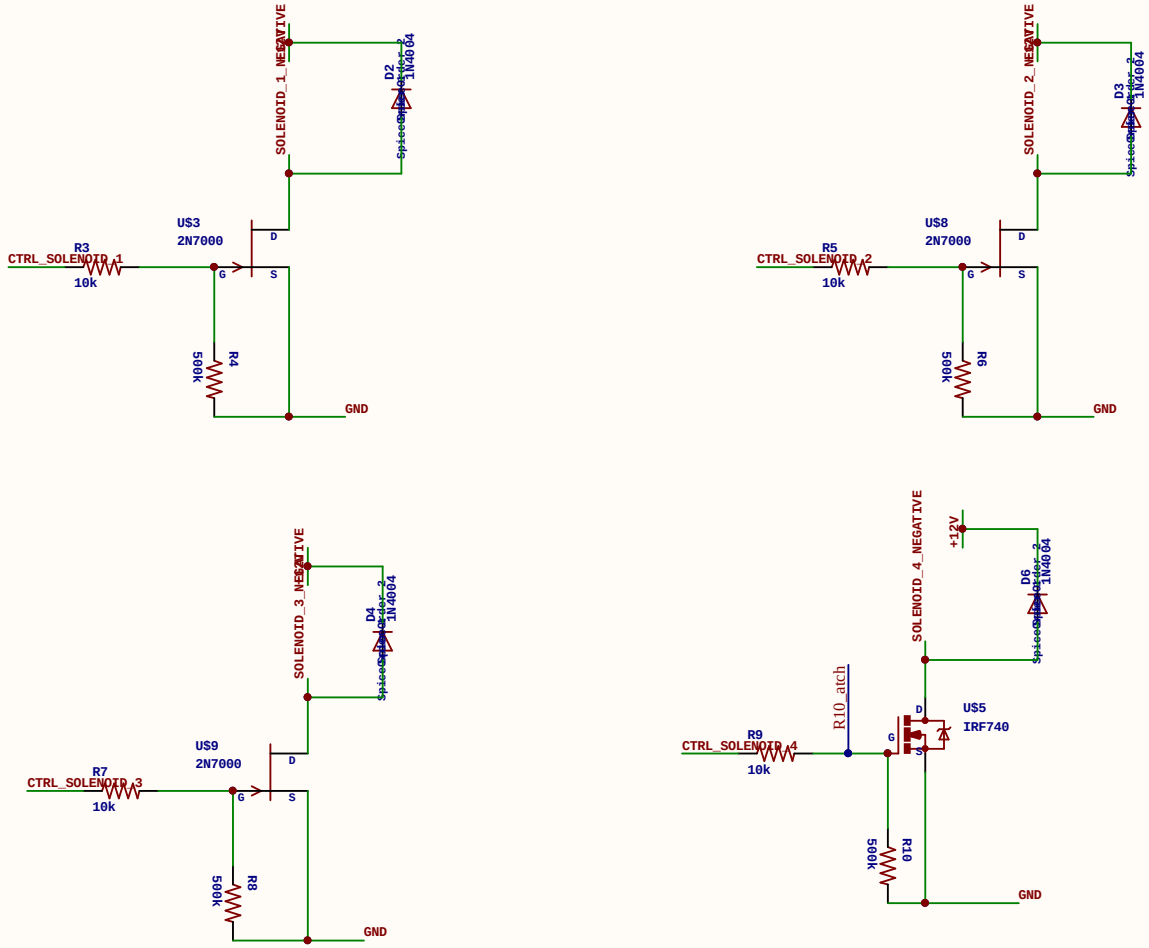

main

9/25/2019 7:26:12 PM

Sheet:

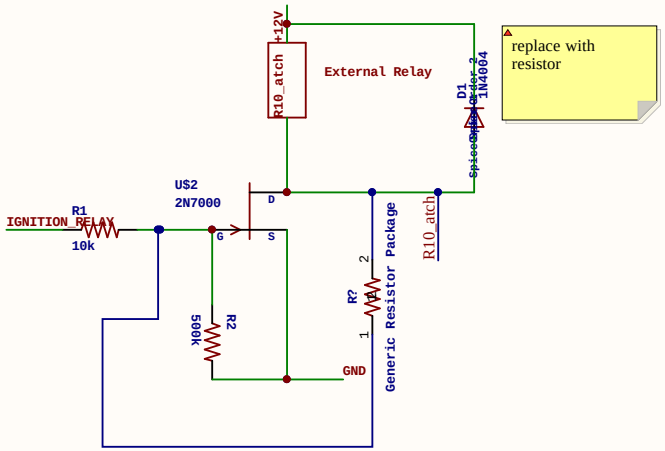

main

9/25/2019 7:26:14 PM

Sheet:

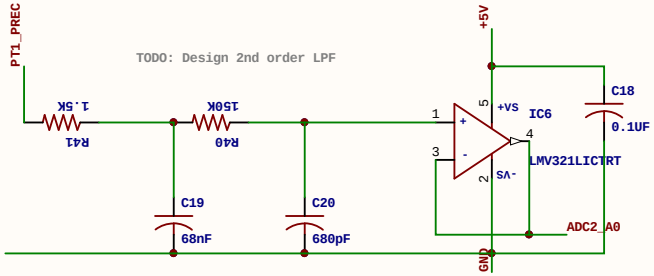

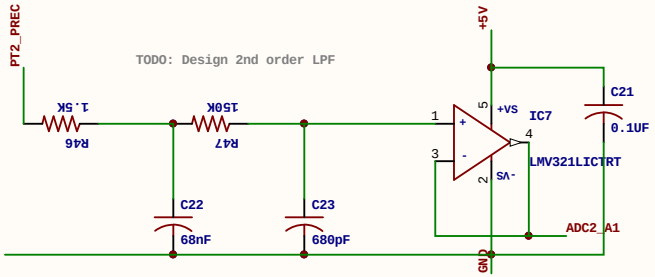

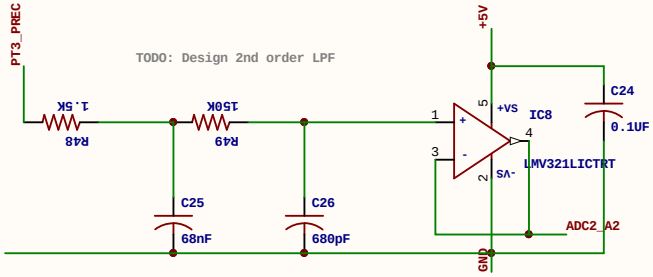

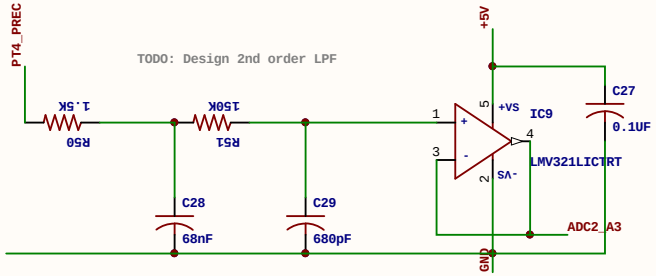

main	
9/25/2019 7:26:17 PM	
Sheet:	

External Signal Connectors

LC3/4A
- 1 — A1 B1 — LC_4_OUT+
- 2 — A2 B2 — LC_4_OUT-
- 1991118
- 3 — A3 B3 — LC_3_OUT+
- 1991118
- 4 — A4 B4 — LC_3_OUT-
- 1991118

LC1/2A
- 1 — A1 B1 — LC_2_OUT+
- 2 — A2 B2 — LC_2_OUT-
- 1991118
- 3 — A3 B3 — LC_1_OUT+
- 1991118
- 4 — A4 B4 — LC_1_OUT-
- 1991118

PT1/2A
- 1 — A1 B1 — +10V
- 2 — A2 B2 — PT1_VS-
- 1991118
- 3 — A3 B3 — +10V
- 1991118
- 4 — A4 B4 — PT2_VS-
- 1991118

PT3/4A
- 1 — A1 B1 — +10V
- 2 — A2 B2 — PT3_VS-
- 1991118
- 3 — A3 B3 — +10V
- 1991118
- 4 — A4 B4 — PT4_VS-
- 1991118

THERMOCOUPLESA
- 1 — A1 B1 — ADC2_A4 — TC_1
- 2 — A2 B2 — ADC2_A5 — TC_2
- 1991118
- 3 — A3 B3 — ADC2_A6 — TC_3
- 1991118
- 4 — A4 B4 — ADC2_A7 — TC_4
- 1991118

External Power Connectors

PWR_OUT1A
- 1 — A1 B1 — +10V
- 2 — A2 B2 — +12V
- 1991095

PWR_OUT2A
- 1 — A1 B1 — +3V3
- 2 — A2 B2 — +5V
- 1991095

SOL+RELAYA
- 1 — A1 B1 — R10_atch
- 2 — A2 B2 — SOLENOID_1_NEGATIVE
- 1991095

SOLENOIDSA
- 1 — A1 B1 — SOLENOID_2_NEGATIVE
- 2 — A2 B2 — SOLENOID_3_NEGATIVE
- 1991095

TODO: Figure out how to properly distinguish these on the hardware board?

SOLENOIDS2A
- 1 — A1 B1 — SOLENOID_4_NEGATIVE
- 2 — A2 B2 — N$15
- 1991095

RPI GPIO

	RPI_GPIO_40	RPI_GPIOAN
	RPI_GPIO_39	RPI_GPIOAM
	RPI_GPIO_38	RPI_GPIOAL
	RPI_GPIO_37	RPI_GPIOAK
	RPI_GPIO_36	RPI_GPIOAJ
	RPI_GPIO_35	RPI_GPIOAI
	RPI_GPIO_34	RPI_GPIOAH
	RPI_GPIO_33	RPI_GPIOAG
	RPI_GPIO_32	RPI_GPIOAF
	RPI_GPIO_31	RPI_GPIOAE
	RPI_GPIO_30	RPI_GPIOAD
	RPI_GPIO_29	RPI_GPIOAC
	RPI_GPIO_28	RPI_GPIOAB
	RPI_GPIO_27	RPI_GPIOAA
ADC3_CS		RPI_GPIOZ
	RPI_GPIO_25	RPI_GPIOY
ADC2_CS		RPI_GPIOX
SCLK		RPI_GPIOW
ADC1_CS		RPI_GPIOV
MISO		RPI_GPIOU
	RPI_GPIO_20	RPI_GPIOT
MOSI		RPI_GPIOS
CTRL_SOLENOID_4		RPI_GPIOR
	RPI_GPIO_17	RPI_GPIOQ
IGNITION_RELAY		RPI_GPIOP
CTRL_SOLENOID_3		RPI_GPIOO
	RPI_GPIO_14	RPI_GPION
CTRL_SOLENOID_2		RPI_GPIOM
	RPI_GPIO_12	RPI_GPIOL
CTRL_SOLENOID_1		RPI_GPIOK
	RPI_GPIO_10	RPI_GPIOJ
	RPI_GPIO_9	RPI_GPIOI
	RPI_GPIO_8	RPI_GPIOH
	RPI_GPIO_7	RPI_GPIOG
GND		RPI_GPIOF
	RPI_GPIO_5	RPI_GPIOE
	RPI_GPIO_4	RPI_GPIOD
	RPI_GPIO_3	RPI_GPIOC
DO NOT CONNECT +5V_RPI		RPI_GPIOB
	RPI_GPIO_1	RPI_GPIOA

2540-5

main

9/25/2019 7:26:20 PM

Sheet:

2nd order Butterworth Lowpass Filter. Gain 5V/V, Cutoff 2.5KHz

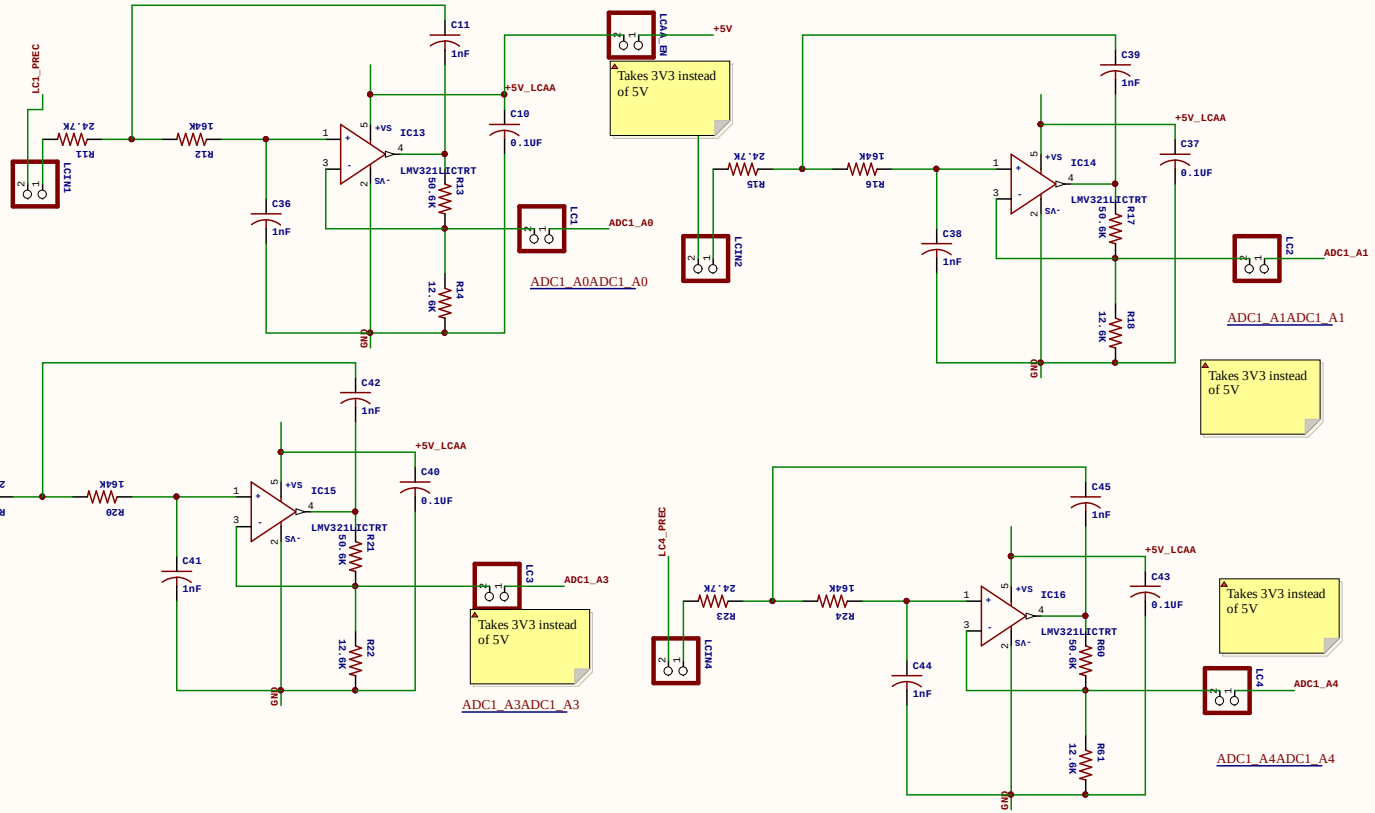

main	
9/25/2019 7:26:22 PM	
Sheet:	

Alternately selectable Filter stage that can be used for MK2

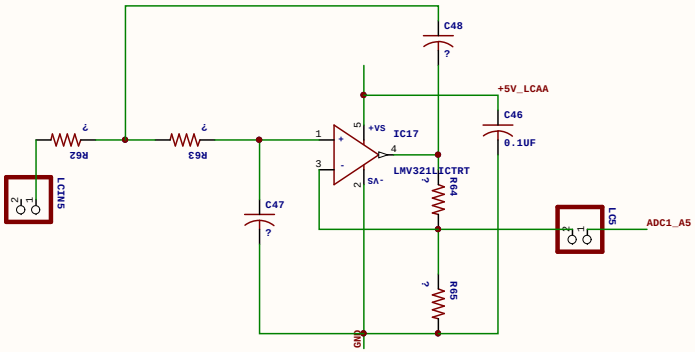

ADC_1 Debug pins

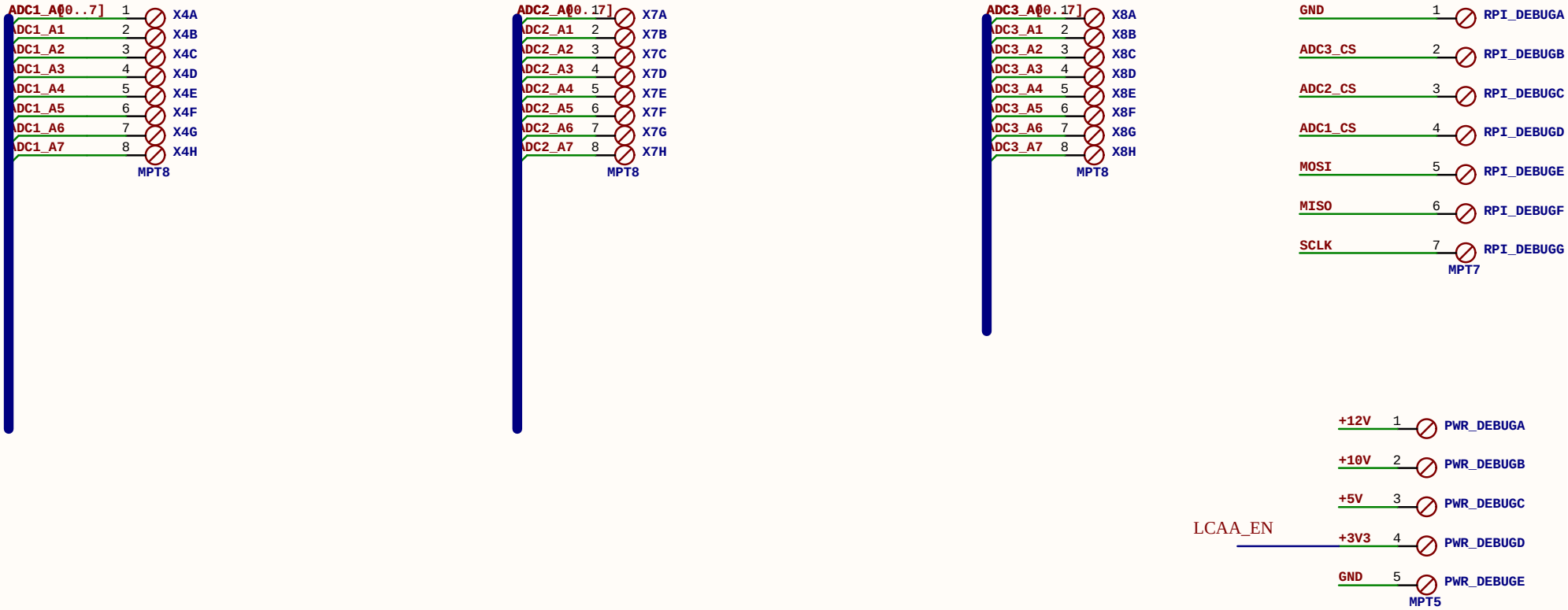

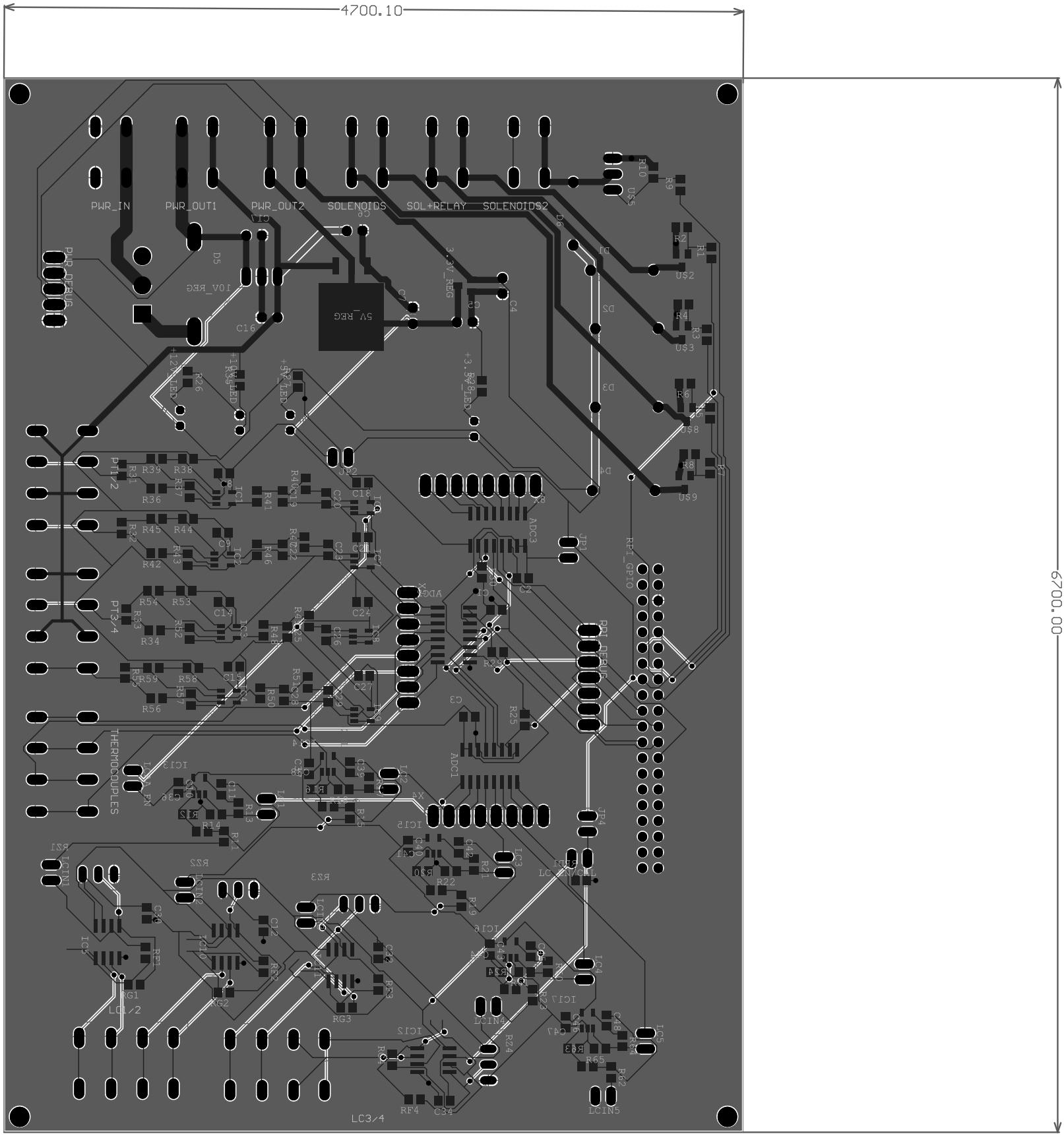
4700.10
6700.00
PWR_IN
PWR_OUT1
PWR_OUT2
SOLENOIDS
SOL+RELAY
SOLENOIDS2
PWR_DEBUG
10V_REG
5V_REG
3.3V_REG
+12V_LED
+10V_LED
+5V_LED
+3.3V_LED
PT1/2
PT3/4
THERMOCOUPLES
ADC3
ADC1
RPI_GPIO
RPI_DEBUG
LC1/2
LC3/4
LC1N5

Footprint	Description	Designator	Footprint	LibRef	Quantity
SFD2026-S-R013	9-W Regulator(SO-8,Pin Adj)	U_5V_R60	SOT23	SFD2026-S-R013	1
1206MM	CHIPLEDS0 R871, LE R872, LV R875, LE R874, LV R873, LV R877, LE R876, LV R881 LH R879, LE R878, LE R880 LH R882,S QR78, LE QR76, LV QR79,D QR86 Hyper CHPLED18 Q1818,B QR85, LB QR84, LB R884 SMALEDS0 R870, LE R869, LY R878, LE R871, LY R870, LE R872, LP R879B R873, LY R874, LY R875, LP R876, LP R877, LP R878, LP R879, LP R880, LP R881, LP R882, LP R883, LP R884, LP	+3.3V_LED, +5V_LED, +3V_LED, +12V_LED	1206MM	1206MM	4
1812MM0 SLT0402PB	1	SLI_R60	7038	1812MM0 SLT0402PB	1
UA78M7	POSITIVE VOLTAGE REGULATOR 0.5Source http://focus.ti.com/lit/ds/symlink/uaa7 8m07.pdf	U_R63	TO220	UA78M7	1
ACF9B0R0	2-TV Dual Channel 12-Bit A/D Converter with 3Pi Serial Interface(Rev. A) http://www.ti.com/lit/ds/symlink/adc12d080.pdf	ADC2_ADC3	SO-16	ACF9B0R0	2
50F	CAPACITOR, American symbol	C1, C2, C3, C12, C30, C32, C34	C0805	C-1SC0805	7
0.5UF	POLARIZED CAPACITOR, American symbol	C4	E2-5-5	CPG-1812-5-5	1
50F	POLARIZED CAPACITOR, American symbol	C5	E2-5-5	CPG-1812-5-5	1
0.5UF	POLARIZED CAPACITOR, American symbol	C6, C7	E2-5-5	CPG-1812-5-5	2
0.1UF	CAPACITOR, American symbol	C8, C9, C10, C11, C14, C15, C16, C21, C27, C31, C37, C39, C40, C48	C0805	C-1SC0805	13
50F	CAPACITOR, American symbol	C13, C29, C36, C38, C41, C42, C45	C0805	C-1SC0805	8
0.1UF	POLARIZED CAPACITOR, American symbol	C18	E2-5-5	CPG-1812-5-5	1
0.33UF	POLARIZED CAPACITOR, American symbol	C17	E2-5-5	CPG-1812-5-5	1
50F	CAPACITOR, American symbol	C19, C22, C26, C28	C0805	C-1SC0805	4
50F	CAPACITOR, American symbol	C20, C23, C24, C25	C0805	C-1SC0805	4
	CAPACITOR, American symbol	C31, C33	C0805	C-1SC0805	2
1N4003	DIODE(general purpose rectifier, 1.0, 50, 200	D1, D2, D3, D6	DO41-10	1N4003	4
DIODE	DIODE	D4	DO201-15	DIODE	1
DIODE-15	DIODE	D5	DO201-15	DIODE-15	1
1AFD321CT-RT	High Performance 100 MHz Rail/RR Op Amps(Source http://www.analog.com/static/imported-files/data_sheets/AD8099_8099.pdf	IC1, IC2, IC3, IC4, IC5, IC6, IC7, IC8, IC9, IC10, IC11, IC12, IC13, IC14, IC15, IC16, IC17	SOT23-6	1AFD321CT-RT	13
ACF9B0G0	Low Power, Low Voltage Rail-to-Rail Amplifier(Source http://www.analog.com/uploaded/AD8541_5461_117760324_0_0.pdf	IC18, IC19, IC20, IC21, IC22	SO-8	ACF9B0G0	4
PBH40-1X3	PIN HEADER	JP1, JP3, JP4, J1_RACIAL, LC1, LC2, LC3, LC4, LC5, LC6, LC7, LC8, LC9, LC10, LC11, LC12, LC13, LC14, LC15, LC16, LC17, LC18, LC19, LC20, LC21, LC22, LC23, LC24, PTL1, PTL2, PTL3, THERMOCOUPLE	1X3	PBH40-1X3	19
SRB118			SRB118	SRB118	5
APF6	PHONEJACK CONNECTOR	PWR_JOBN	APH1/2/4	APF6	2
SRB1B6		PWR_IN, PWR_OUT1, PWR_OUT2, SDL+RELAY, SOUNDER1, SOUNDER2	SRB1B6	SRB1B6	5
R5	RESISTOR, American symbol	R1, R3, R6, R7, R8, R9, R10, R11, R12, R13, R14, R15, R16, R17, R18, R19, R20, R21, R22, R23, R24, R25, R26, R27, R28, R29, R30, R31, R32, R33, R34, R35, R36, R37, R38, R39, R40, R41, R42, R43, R44, R45,